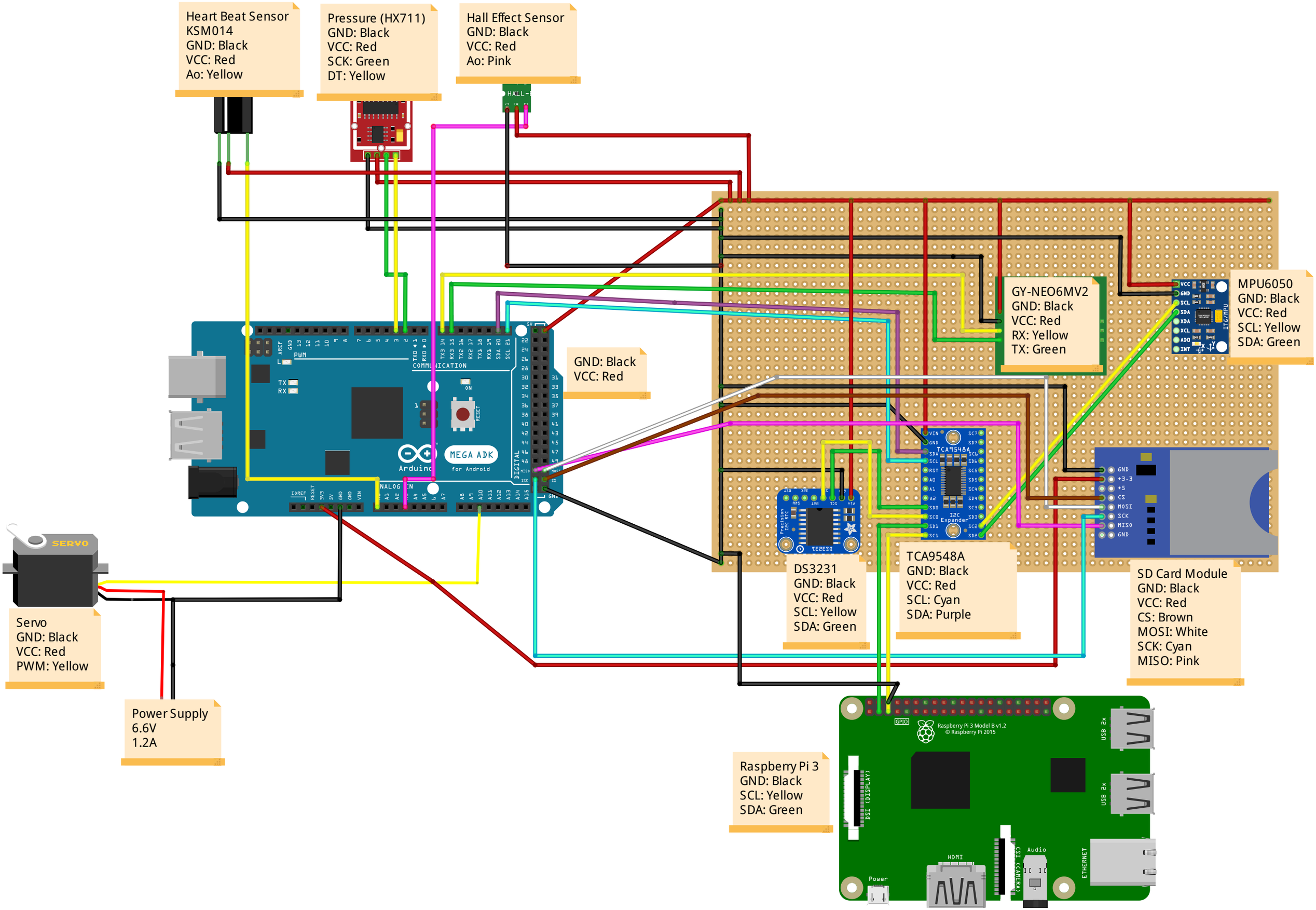
Heart Beat Sensor
KSM014
GND: Black
VCC: Red
Ao: Yellow
Pressure (HX711)
GND: Black
VCC: Red
SCK: Green
DT: Yellow
Hall Effect Sensor
GND: Black
VCC: Red
Ao: Pink
GND: Black
VCC: Red
GY-NEO6MV2
GND: Black
VCC: Red
RX: Yellow
TX: Green
MPU6050
GND: Black
VCC: Red
SCL: Yellow
SDA: Green
DS3231
GND: Black
VCC: Red
SCL: Yellow
SDA: Green
TCA9548A
GND: Black
VCC: Red
SCL: Cyan
SDA: Purple
SD Card Module
GND: Black
VCC: Red
CS: Brown
MOSI: White
SCK: Cyan
MISO: Pink
Servo
GND: Black
VCC: Red
PWM: Yellow
Power Supply
6.6V
1.2A
Raspberry Pi 3
GND: Black
SCL: Yellow
SDA: Green